LS-9290 Micro Blower

AL impeller and Plastic casing（UL and ISO10993）

All air-contacting parts are respiratory-physiologically harmless

Power supply :>24V-10A ,

>12V-16A

48VDC and 220VAC are available

Dimensions 92*92*100mm

No.	Wires	Code
1	白 white	U
2	蓝 Blue	V
3	黄 Yellow	W
4	黑 Black	GND
5	灰 Gray	Ha
6	绿 Green	Hb
7	橙 Orange	Hc
8	红 Red	十5V

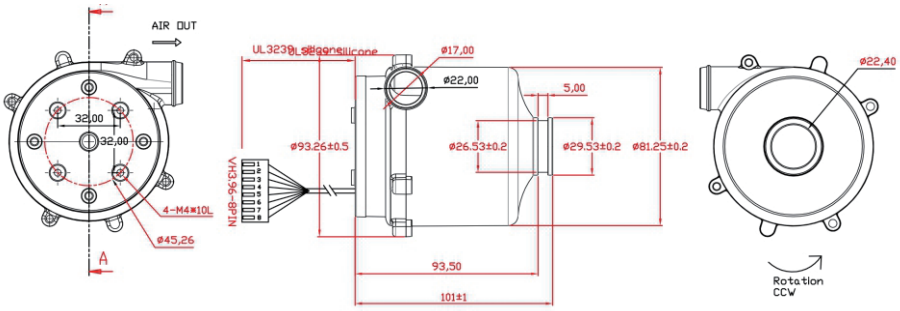

Micro Blower Main Parameters

Model+Normal Voltage	Flow	Pressure	Current	speed	Voltage range	Power	Resistance	Inductance	Rotor inertia
	l/min	kpa	A	rpm	V	p	mΩ	uH	gcm2
LS9290-12V	600	11.5	15.8	22000	7.8 - 14.8	162	95	22-25	28.37
LS9290-24V	680	13	9	23500	7.8 - 30	200	230	86-88	28.37

Model+Normal Voltage	Noise	MTBF	Using Temp	Weight	Hall Angle	Pole pair	Connection	IP Class	Controller version
	dB	Hour	℃	g					
LS9290-12V	50	25000	-20 TO 90	350	120	4P=2	Y	IP54	LS7652-12V-250W
LS9290-24V									LS7652-24V-250W
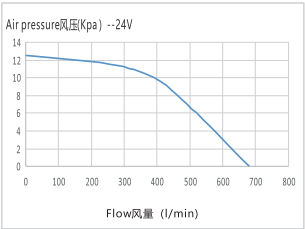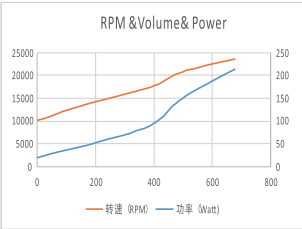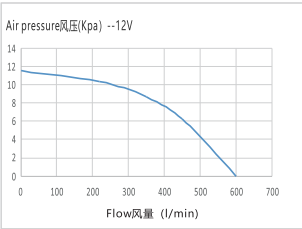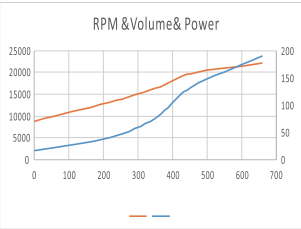
Flow & Pressure Curves